GARIBALDIGLASS
innovation | solutions

COMPONENT SPECIFICATION SHEET

DORMA 8835 Top Rail End Load Closer Arm

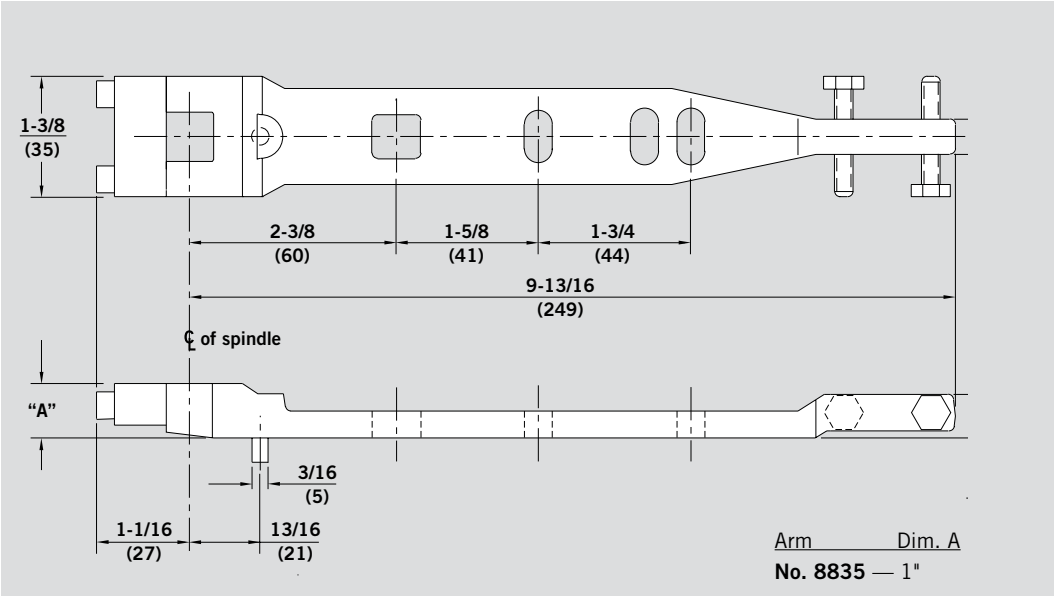

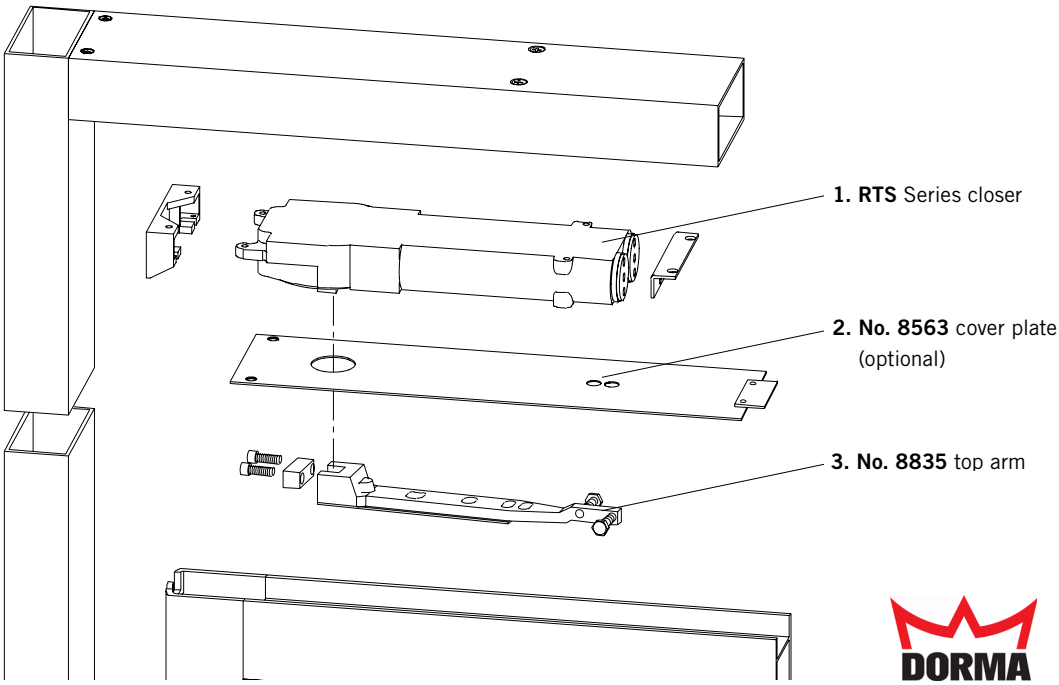

DORMA

8183 WIGGINS ST. BURNABY BC V3N0C4 | TEL (604) 420-4527 | FAX (604) 420-4527 | garibaldiglass.com